MXCHIP®

Datasheet

EMW307x Wi-Fi Module

Built-in ARM Cortex-M4F Wi-Fi MCU
2.4G Hz IEEE 802.11 b/g/n, ultra-high integration, rich peripherals

Version：4.2 Date：2019-09-12 Number：DS0138EN

Abstract

- **Input Voltage：2.7V~3.6V**
- **Processor：ARM Cortex-M4 Processor Core**
  - Cortex-M4F core，up to 160MHz
  - 26MHz clock input
  - SWD/JTAG simulation debugger interface
- **Memory**
  - 256K bytes SRAM
  - 24K bytes Boot ROM
  - 512 bytes OTP memory area
  - 2M bytes XIP flash
- **Wi-Fi**
  - IEEE 802.11 b/g/n 1T1R 2.4GHz Single Frequency
  - Built-in power amplifier(PA) with self-calibration
  - Support 802.11e QoS enhancement (WMM)
  - Support WPA/WPA2 PSK，Open/WEP/TKIP/CCMP
  - Support IEEE Power Save mode
- **Rich Peripherals**
  - 16 x GPIO
  - 3 x SPI、2 x I2C、8 x PWM、8 x Timer
  - 3 x UART，Support hardware flow control
  - Up to 8 10-bit ADC channels
  - RTC
- **Operating Temperature：** -40℃ to +105℃
- **Antenna：** On-Board PCB Antenna，or IPEX Connector
- **Application Functions**
  - Support AliOS and MXOS operating system
  - Provide major cloud platforms access SDK
  - Mass production firmware for typical applications such as smart appliances, lighting, and sockets
- **Interface and Dimension**
  - Maintain pin compatibility with similar package modules
  - EMW3070: 18mm x 33mm, stamp hole or pin EMW3070: 18mm x 33mm
    - ✓ Support external antenna
    - ✓ Typical applications: smart home appliances, IoT data terminals

  - EMW3071：13.8mm x 15mm，golden finger
    - ✓ Typical Application:，smart electricians,

lighting. Particularly suitable for smart sockets
  - EMW3072：16mm x 24mm，Stamp Holes
    - ✓ Typical Application：Smart electrician,

lighting, especially suitable for bulbs.

Order Code

For example, **EMW 3 07 0 -P I 6**

Product Series

EMW=IoT Wi-Fi Module

Product Type

3=Welding type wireless module

Typical target applications and features

07=IOT Application 7 Series

Dimensions, enhancements

0=18mm x 33mm , 2 x 6pin 2.0 Spacing double row stamp hole + 9 pin 2.0 Spacing stamp hole or pin

1=13.8mm x 15mm , 5pin + 6 pin 2.0 Spacing golden finger

2=16mm x 24mm , 2 x 8 pin 2.0 Spacing double row stamp hole

RF Interface

P=2.4GHz On-Board PCB Antenna

E=2.4GHz External Antenna IPEX Connector

Flash Capacity

I=2M bytes Flash Memory

J=4M bytes Flash Memory

Operating Temperature

6=Industrial Temperature Range, -40°C~85°C

7= Industrial Temperature Range , -40°C~105°C

8= Industrial Temperature Range , -40°C~120°C

Optional Model

Order Code	Description
EMW3070-PI6	18mm x 33mm stamp hole interface, external antenna holder, 2M bytes flash memory,-40°C~85°C
EMW3070-EI6	18mm x 33mm stamp hole interface, external antenna holder , on-board PCB Antenna , 2M bytes flash memory , -40°C~85°C
EMW3071-PI6	13.8mm x 15mm Golden finger interface , on-board PCB Antenna , 2M bytes flash memory , -40°C~85°C
EMW3072-PI6	16mm x 24mm stamp hole interface, external antenna holder , on-board PCB Antenna , 2M bytes flash memory , -40°C~85°C
EMW3072-PI7	16mm x 24mm stamp hole interface, external antenna holder , on-board PCB Antenna , 2M bytes flash memory , -40°C~105°C

Parts

Order Code	Description
MXKIT-Base	Development board for all EMW307x modules
MXKIT-Core-3070	The development board core board for the EMW3070, including the EMW3070-PI6 module. Used with MXKIT-Base
MXKIT-Core-3071	The development board core board for the EMW3071, including the EMW3071-PI6 module. Used with MXKIT-Base
MXKIT-Core-3072	The development board core board for the EMW3072, including the EMW3072-PI7 module. Used with MXKIT-Base
FX-3070	EMW3070 production fixture with accompanying test board: MXKIT-Base， MXKIT-Core-3070
FX-3071	EMW3071 production fixture with accompanying test board: MXKIT-Base， MXKIT-Core-3071
FX-3072	EMW3072 production fixture with accompanying test board：MXKIT-Base， MXKIT-Core-3072
MXFlasher	Offline writer for burning chips such as MOC108, MOC108A, MX1270

Version Update Instructions

Date	Version	Update Contents
2019-5-22	1.0	Initial Document
2019-5-29	1.1	Correct the supply voltage to 3.3V; PWM9 in the pin13 function table is corrected to PWM0; Remove the schematic module pin14 as the comment of PWM1; Pin2 is changed to PWM1 and modify the pin description.
2019-06-08	2.0	Update document format and content to match actual product.
2019-06-18	2.1	Unified pin definition
2019-07-18	3.0	Update EMW3072 pin definition
2019-07-26	4.0	Update the parameters such as the main frequency of the MX1270
2019-07-30	4.1	Update PCB antenna parameters, temperature range
2019-08-07	4.2	Update the RF parameters of EMW3070, EMW3072 and delete the description of 11n HT40.

Copyright Notice

Catalog

Table Catalog

Figure Catalog

1. Introduction

The EMW307x series modules are mainly used for IoT data communication. Data collection and control is realized through a rich peripheral interface, and data can be transmitted to the Internet of Things cloud service platform through a Wi-Fi network connection to realize the Internet of Everything. This series of modules is used in a wide range of IoT applications through a variety of different form factors, interface types, antenna interfaces and temperature range.

The module includes a super-integrated Wi-Fi microcontroller MX1270 that integrates a Cortex-M4F core up to 160MHz, 256K bytes of SRAM, 2M bytes of Flash memory, and IEEE 802.11 b/g/ n Standard 2.4 GHz RF. Streamlined peripheral circuitry makes the overall module size and interface design more flexible and easier to control costs. The high-performance processing core and security module greatly improve the speed of networking interaction and reduce the overall power consumption while ensuring data security.

Shanghai Qingke provides MXOS and AliOS software platforms to support the development of EMW307x series modules, providing an efficient development environment, access protocol stacks for various IoT cloud services, rich sample programs and various typical applications.

The following figure shows the hardware block diagram of the EMW307x module, which mainly includes:

- Wi-Fi Microcontroller MX1270
- Onboard or external antenna
- Power and communication interface

Figure 1 EMW307x Hardware Block Diagram

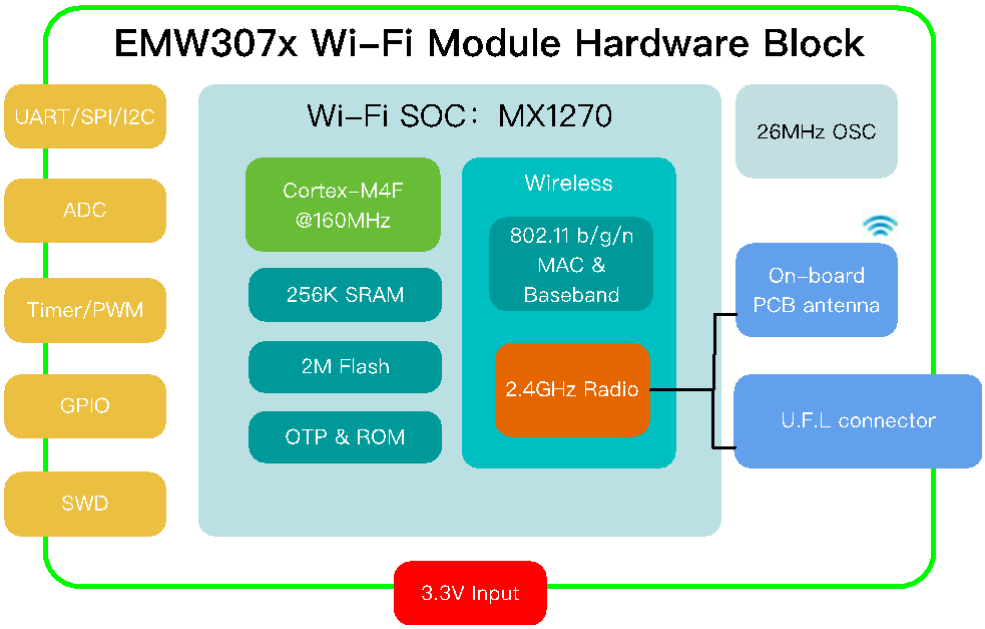

2. Pin Definition

2.1. Pin Arrangement

2.1.1. EMW3070

Figure 2 EMW3070 Pin Arrangement

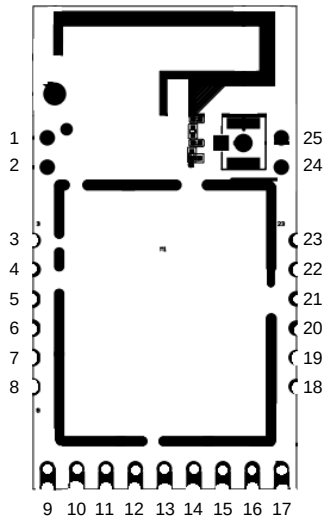

2.1.2. EMW3071

Figure 3 EMW3071 Pin Arrangement

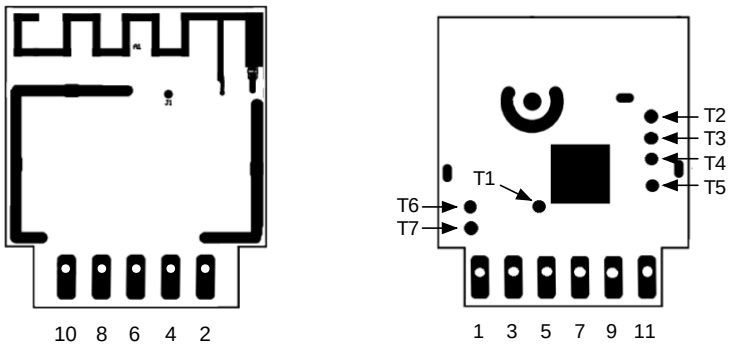

2.1.3. EMW3072

Figure 4 EMW3072 Pin Arrangement

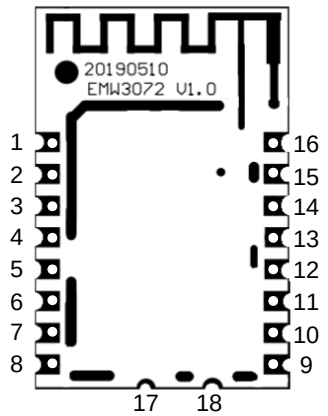

2.2. Pin Definition

Table 1 Pin Definition

Pin Number			Name	Main Function (After Reset)	Alternate Function 1	Alternate Function 2	Alternate Function 3	Alternate Function 4	Analog Function
EMW3070	EMW3071	EMW3072							
9	7	16	P0	GPIO0	UART0_TXD	SWCLK	SPI1_CSN	PWM5	
10	5	15	P1	GPIO1	UART0_RXD	SWDIO	SPI1_SCK	PWM7	
21,24	T2	11	P2(3)	GPIO2	UART1_TXD	UART1_TXD	SPI1_MISO	I2C0_SCL	
22,25	T3	12	P3(3)	GPIO3	UART1_RXD	SDIO_INT	SPI1_MOSI	I2C0_SDA	
1,3	T4	2	P4	SWCLK	GPIO_4	SDIO_CMD	UART0_TXD	PWM0	ADC_CH0
2,4	T5	4	P5	SWDIO	GPIO_5	SDIO_CLK	UART0_RXD	PWM2	ADC_CH1
5	9	6	P6	GPIO6	SPI0_CSN	SDIO_DATA0	UART0_CTS	PWM4	ADC_CH2
6	11	7	P7	GPIO7	SPI0_SCK	SDIO_DATA1	UART0_RTS	PWM6	ADC_CH3
7		10	P8	GPIO8	SPI0_MOSI	SDIO_DATA2	I2C1_SCL	UART1_TXD	ADC_CH4
8			P9	GPIO9	SPI0_MISO	SDIO_DATA3	I2C1_SDA	UART1_RXD	ADC_CH5
13	2	14	P10(1)	SEL3	PWM1	GPIO10	UART2_CTS	SPI2_SCK	ADC_CH6
20	8	5	P11(2)	GPIO11	PWM3	SDIO_INT	UART2_RTS	SPI2_MOSI	ADC_CH7
19	T6	17	P12(2)	GPIO12	GPIO12	SPI2_CSN	UART2_TXD	GPIO12	
23	T7	3	P13(2)	GPIO13	GPIO13	SPI2_MISO	UART2_RXD	GPIO13	
12	4	13	P14(1)	SEL1	PWM0	SPI2_SCK	UART1_CTS	GPIO14	
14	6		P15(1)	SEL2	PWM2	SPI2_MOSI	UART1_RTS	GPIO15	
18	T1	18	P16(1)	SEL					
15			NC						
11	10	1	nRESET	nRESET					
16	1	8	VDD	VDD					
17	3	9	VSS	VSS					

(1). During the startup phase, the chip processor hardware enters the corresponding operating mode by detecting the state of these pins, see Section 4.1. All other digital pins are in input pull-down mode by default after hardware startup, and the pull-down resistors are 10-20k ohms until the firmware changes their state.

(2). After the startup is completed, when the processor runs the firmware provided by MXCHIP, the firmware detects the status of these pins to enter the corresponding working mode, see section 4.2.

(3). In the firmware provided by Qingke, it is usually used as the input of the debugging information and the input of the command, that is, the debugging serial port.

(4). When the IO port is set to the UARTx_RX signal, the hardware should not be grounded, otherwise the processor will not work properly.

3. Memory Space Allocation

The Wi-Fi SOC MX1070 of the EMW307x module contains the following memories:

- **ROM**

Starting at address 0x0000_0000 is a read-only memory of size 24k bytes. The BOOT image is stored in the ROM, which is mainly used to program the Flash, and performs safe boot or normal startup according to the mode selection, and guides the application image running in the Flash.

- **SRAM**

256kbytes of SRAM, which can be used not only to execute code, store data, but also to share the shared memory of Wi-Fi message buffers. The starting address of the SRAM is 0x0800_0000.

- **Flash**

The MX1070 integrates a 2M byte QPSI Flash through the System-in-Package (SiP) package. The processor uses the cache to retrieve code and data from Flash and supports redirection to encrypt code and data.

- **OTP (One-Time Programmable Memory)**

The MX1070 offers 512-byte One-Time Programmable (OTP) storage. The user available area is: 0xD7 - 0x1F7. Other space pre-stores hardware configuration parameters such as Flash encryption information, MAC address, and RF calibration parameters. The system automatically reads each time after reset.

The system storage space address is assigned as follows:

Table 2 System Storage Space

Name	Start Address	End Address
ROM	0x0000_0000	0x0000_5FFF
SRAM	0x0800_0000	0x0803_FFFF
FLASH	0x1000_0000	0x17FF_FFFF
Peripheral registers	0x4000_0000	0x4001_DFFF
Share mem，MAC/PHY	0x6000_0000	0x61FF_FFFF

Flash Space pre-allocation is as follows：

Table 3 Flash Storage Space

Name	Description	Offset Start	Offset End	Size
Bootloader	Bootloader program for burning	0x0000_0000	0x0000_4FFF	20 Kbytes
System Info	Reserved, system information, please do not use	0x0000_5000	0x0000_5FFF	4 Kbytes
KV Data	Key/Value Data area, read and write with KV component of MXOS	0x0000_6000	0x0000_9FFF	16 Kbytes
Application	Application firmware developed with MXOS	0x0000_A000	0x000F_FFFF	984 Kbytes
OTA	Temporary storage area for OTA data using compression algorithms	0x0010_0000	0x001A_3FFF	656 Kbytes

4. Work Mode Selection

After reset, the module will enter different working states, some of which are realized by code in hardware or ROM, which is called hardware working mode; some are realized by firmware programmed in the module, which is called firmware working mode. The hardware working mode cannot be modified, and the firmware working mode can achieve different functions depending on the firmware being programmed. The firmware provided by MXCHIP usually defines some working modes to facilitate production and testing. After the module is started, first perform hardware initialization, select the hardware working mode, and then boot the firmware to select the firmware working mode.

Figure 5 Module Startup Process

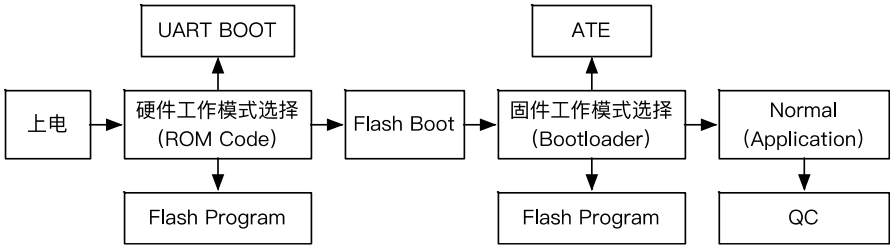

4.1. Hardware Working Mode Selection

The hardware working modes are as follows:

- Flash Boot Mode: Boots the code stored on the Flash.
- UART Boot Mode: After downloading the code from UART1 (P2, P3) to SRAM, boot the code saved in SRAM.
- Flash Program Mode: The working mode of programming the Flash inside the chip directly. Not recommended, this article does not introduce.

Table 4 Hardware Working Mode Selection

Hardware working mode	P10 (SEL3)	P15 (SEL2)	P14 (SEL1)	P16 (SEL)
Flash Boot Mode	0	0	0	0
UART Boot Mode	0	0	1	0
Flash Program Mode	1	0	0	1

Note: If P10, P14, P15, P16 are at a level other than the above list, the chip will enter other unknown modes of operation. The pin does not have external interference and is driven low by default.

4.2. Firmware Working Mode Selection

The firmware working mode is determined by the firmware being burned. The working mode described below is a commonly used function in the firmware provided by Qingke and is for reference only. Before the final production, if these functions are useful, a verification test is required. The firmware works in the following modes:

- Normal: The application runs normally.
- Bootloader: Runs and remains in the bootloader. The bootloader can be used to update the application, as described in Section 6.2.

- ATE: Runs the RF test mode, in which the RF transmit power, receive sensitivity, and RF parameters can be tested. Interact with the ATE command using UART1 (P2, P3).
- QC: Run the factory test mode, output QC information through UART0 (P0, P1), and cooperate with the detection program running on the PC, which can be used to verify the firmware version of the module, the login information of the cloud service and the basic hardware functions.

When detecting the pin state, the firmware first sets the mode of P11, P12, and P13 to the input pull-up. Therefore, if the external does not interfere, the read IO state is high, and the default working state is: Normal.

Table 5 Firmware Working Mode Selection

Firmware working mode	P11 (STATUS)	P12 (BOOT)	P13 (EASYLINK)
Normal	No Detection	1	No Detection
Bootloader	1	0	No Detection
ATE	1	0	0
QC	0	0	No Detection

5. ATE (RF Test Mode)

Connect UART1 (P2: UART1_TXD, P3: UART1_RXD) to the serial port terminal of the PC, and use the serial terminal to send and receive ATE commands. First enter the wifi_rftest command and then perform a TX test so that the calibrated value can be recalled.

```
wifi_rftest //Read the calibration value and start to test
```

ATE command example is as follows

1. IEEE 802.11b 1Mbps modulated wave transmission test

```
wifi_setchn 1 //Channel switching, numbers 1~13 indicate corresponding channels
wifi_test tx 11b 1 //Test IEEE802.11b modulation, 1Mbps rate, if testing 11Mbps rate, input 11
wifi_test tx stop // Stop modulated wave emission
```

2. IEEE 802.11g 6Mbps modulated wave transmission test

```
wifi_setchn 1   //Channel switching, numbers 1~13 indicate corresponding channels
wifi_test tx 11g 6   //Test IEEE802.11g debug, 6Mbps rate, if testing 54Mbps rate, input 54
wifi_test tx stop // Stop modulated wave emission
```

3. IEEE 802.11n HT20 MCS0 modulated wave transmission test

```
wifi_setchn 1 // Channel switching, numbers 1~13 indicate corresponding channels
wifi_test tx 11n 0 //Test IEEE802.11n modulation, HT20 bandwidth, rate mcs0, if testing MCS7 rate, input 7
wifi_test tx stop
```

4. Single carrier transmission：

```
wifi_setchn 1 // Channel switching, numbers 1~13 indicate corresponding channels
wifi_stone //Start single carrier transmission
wifi_exit_stone   // Exit single carrier test
```

5. Duty cycle adjustment

```
wifi_setduty 90 // Set 90% duty cycle
wifi_setchn 1 // Channel switching, numbers 1~13 indicate corresponding channels
wifi_test tx 11g 6 //Test IEEE 802.11g 6Mbps, if testing 54M rate, input 54, other systems and rates operate the same
```

6. Receive sensitivity test

```
wifi_setchn 1 //RX Test channel
wifi_test rx 5 //RX starts counting after 5 seconds
```

Note: You must first complete the wifi_test rx 5 command to send the packet, otherwise the packet will be incomplete. The test process can modify the packet delay time according to the actual situation.

6. Flash Programing

The module's Flash can be programmed in a variety of ways to burn firmware for specific functions. The application scenarios and restrictions of various burning methods are as follows:

Table 6 Flash Programing Method

Method	Interface	Communication Pin	Enter programming mode					Ready to work
			P10	P14	P15	P16	P12	
Simulation debugger	SWD	P4 , P5	-	-	-	-	-	Development environment and JTAG debugger
Bootloader mode	UART0/UART1	P0 , P1 or P2 , P3	0	0	0	0	0	Flash Pre-Burn Bootloader
BAT Burning System	SWD	P4 , P5	-	-	-	-	-	BAT Burning system
Offline Burner	Flash SPI	P0 , P1 , P2 , P3	1	0	0	1	-	Offline Burner

Note: P10, P14, P15, P16 power-on default low level, P12 power-on default high level.

The application scenarios of each burning method are as follows:

- Simulation debugger: burning in the development and debugging phase of the module
- Bootloader mode: After the module is soldered to the product, the module is burned twice. Usually used in the development and debugging phase of user products.
- BAT burning system: The module is secondarily burned on the production line of the module or product, and can be used for the unique ID of the burning device.
- Offline writer: Batch burning single firmware in the module production stage.

In summary, in the development phase, it is recommended to use the emulator debugger or bootloader mode for burning. In the production phase, it is recommended to use the BAT burning system for burning. On the user's motherboard, it is recommended to introduce P4 and P5 as test burning points for development and production.

6.1. Burning with the emulator debugger

When developing module firmware using the MXOS system, the generated firmware can be directly burned into the module by the compile command in the development environment MiCoder. Please refer to the relevant documentation for the MiCoder development environment. The hardware emulator usually chooses JLink, and the connection method is shown in Figure 6:

Figure 6 JLink Connection Diagram

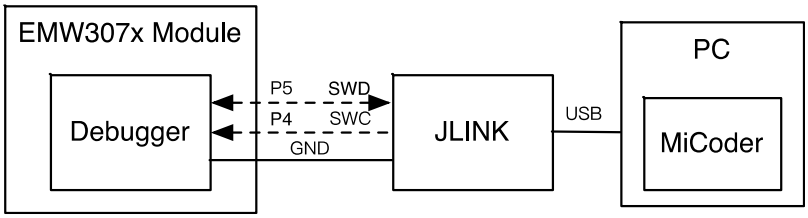

You can download the currently compiled firmware by adding the download parameter to the compile

command. Due to the need to install the development environment, it is not suitable for module batch factory burning.

For example, compile the Helloworld application and execute the command:

```
mxos make helloworld@mx1270 download
```

Command run result：

```
Making config file for first time
processing components: helloworld mx1270 MXOS
......
Downloading applcation, size: 443512 bytes...
##################################################################################
##################################################################################
##################################### 100%   433 KiB    8.0 KiB/s    18 s
Build complete
Making .gdbinit
Making .openocd_cfg
```

If the pre-burned bootloader in the module is destroyed, simply add the total parameter to the command to re-burn the bootloader.

```
mxos make helloworld@mx1270 total download
```

6.2. Burning with Bootloader

After the processor enters the bootloader, it will print the menu from UART0 and UART1, and monitor the two serial ports. Any serial port input programming command can transmit the burned data through the serial port. The serial terminal software uses SecurtCRT to burn the following steps:

- Connect to P0 (UART0_TX), P1 (UART0_RX) or P2 (UART1_TX) and P3 (UART1_RX) of the module using a serial cable. The PC usually uses a USB to serial device for transit. Set the serial port parameters on the SecureCRT: baud rate 921600, 8 data bits, no parity, 1 stop bit.

Figure 7 Bootloader Mode Connection Diagram

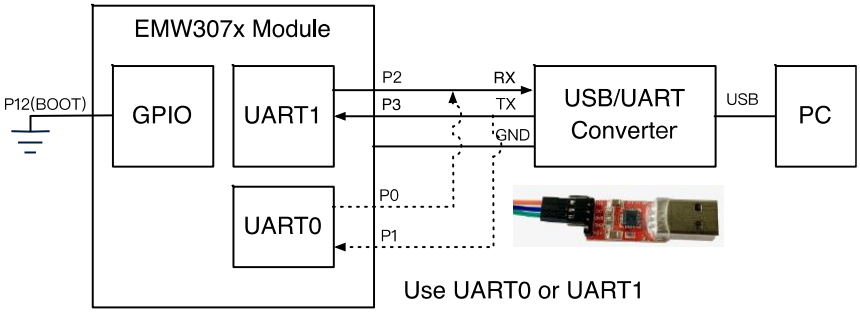

Figure 8 SecureCRT Serial Port Settings

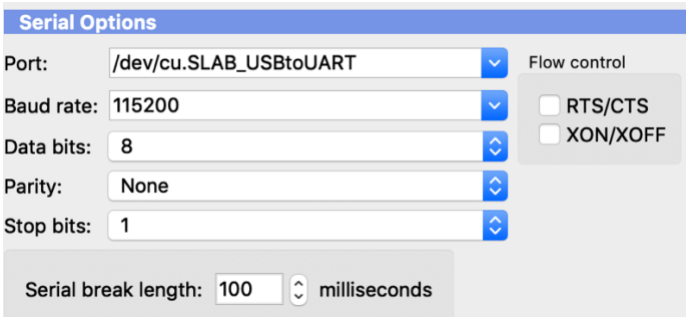

Refer to Section 4.2 to enter the module into the bootloader mode. P10, P14, P15, P16 are grounded or left floating, and P12 can be grounded and powered up. If you enter the bootloader mode correctly, the following information will be printed on the SecurtCRT:

```
MX1270 bootloader v1.1.0 built by SnowYang at Jun 28 2019 10:19:16
 - input "help" for more information.
```

Enter the write command on the SecurtCRT and send the firmware via the Ymodem protocol (click Transfer->Send Ymodem). 0xA000 is the starting address of the application.

```
$ write 0xA000
```

Wait for the transfer to complete.

```
Waiting for the file to be sent ... (press 'a' to abort)
CCCCCCCCCCCCCCCCCCCCCCCCCCCCCCCCCCCCCCCCCCCCCCCC
Starting ymodem transfer.   Press Ctrl+C to cancel.
Transferring /Users/william/Develop/mxos-program/mxos-
demos/build/helloworld@mx1270/binary/helloworld@mx1270.bin...
   100%      433 KB        9 KB/sec     00:00:48        0 Errors

Programming Completed Successfully!
```

List of Bootloader supported commands:

Table 7 List of Commands Supported by Bootloader

Command	Description
help	Display bootloader commands list
read [address] [length]	Read and output the data in Flash through the Ymodem protocol. [address] is the address offset of the data in Flash, [length] is the length of the read data
write [address]	Write data to the [address] offset address of Flash through the Ymodem protocol
erase [address] [length]	Erase the space on the flash starting from [address] and having a length of [length]
boot [address]	Boot the firmware stored on [address] in Flash
reboot	Restart System
dump [address] [length]	Read and display the contents of the [length] length from [address] in the chip memory space, usually used to obtain the contents of the peripheral registers and RAM. To read the contents of Flash, note that the starting address of Flash is 0x10000000.
version	Get the version of bootloader firmware

Note: [address] points to the internal address of Flash, starting at address 0x0.

6.3. Burning Through BAT Burning System

BAT is a production tool for factory batch burning by MXCHIP. It can not only implement firmware burning, but also burn unique IDs for each module, such as cloud service verification code, security key, certificate, token and so on. The BAT system uses a server client architecture. Firmware and ID can be imported in batches on the server to create production tasks and manage the production system in a unified manner. The client synchronizes production tasks from the server, and one client can burn four modules at the same time. The client can also interface with automation systems such as loading machines and robot arms to achieve fully automated production.

For the usage of the BAT system, please refer to the usage documentation related to the BAT system. The EMW307x module interacts with the BAT system via the SWD interface. The following is a block diagram of the application of the BAT system:

Figure 9 BAT Burning System

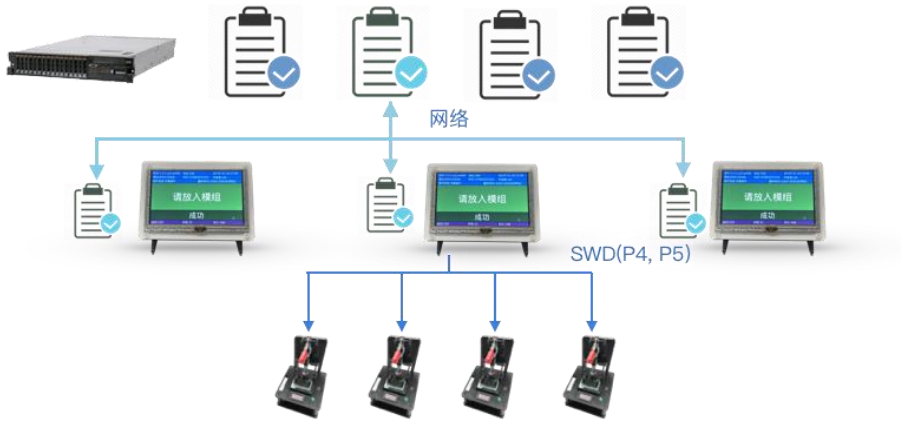

6.4. Burning Through Offline Burner

The offline programmer (model: MXFlasher) is an easy-to-use burning tool. The programmed firmware is saved in the programmer's internal memory. As long as the module is connected correctly, the programming can be started automatically. No complicated installation process is required, suitable for factory batch programming modules.

Figure 10 MXFlasher Burner

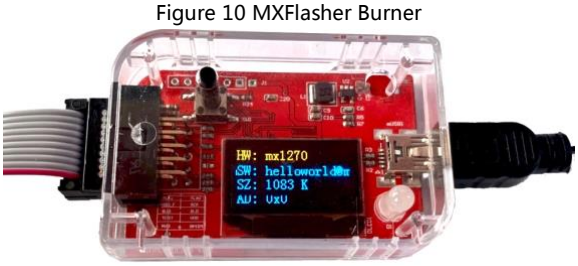

6.4.1. Hardware Connection and Programming

The hardware connection method for programming using MXFlasher is shown in Figure 11. The MXFlasher is powered by USB and can supply power to the module.

Figure 11 MXFlasher Hardware Connection Diagram

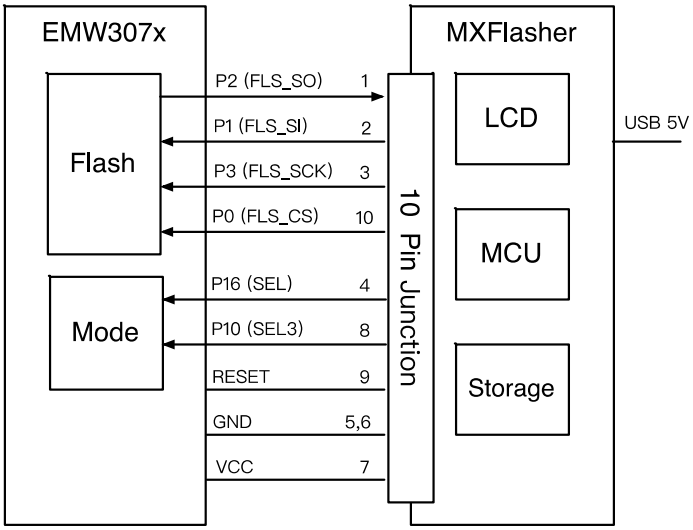

All MXKit-Core-307x core boards lead to a programming interface that can be directly connected to the MXFlasher.

The burning steps are as follows:

- Power the MXFlasher with the USB cable and start the MXFlasher. The screen displays the burner configuration information. Press the button on the MXFlasher and the screen displays "Put into the module".

Figure 12 MXFlasher Start and Enter Programming Mode

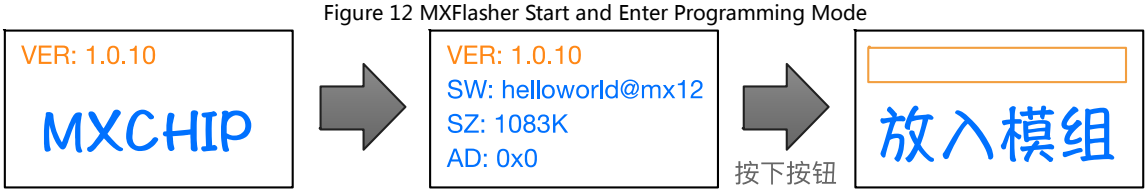

- HW: The target processor to be burned must be confirmed as "MX1270". Otherwise, it cannot be programmed correctly. Please refer to 6.4.2 Reconfiguration.
- SW: Name of the firmware to be burned. Refer to 6.4.2 Change.
- SZ: firmware size for burning
- AD: The target address for programming, please refer to 6.4.2 Reconfiguration.
- Connect the hardware as shown in Figure 11. If you use the MXKit-Core-307x core board, you only need to use a 10-core connection to burn the interface.
- The progress bar and "burning" will be displayed on the screen and the LED will start flashing. Wait for the burning to complete.
- The programming is completed, the screen displays "success" and the LED light is green.
- If an error occurs, the screen displays "Failed" and the LED light is red.

Figure 13 MXFlasher LCD Display during Burning Process

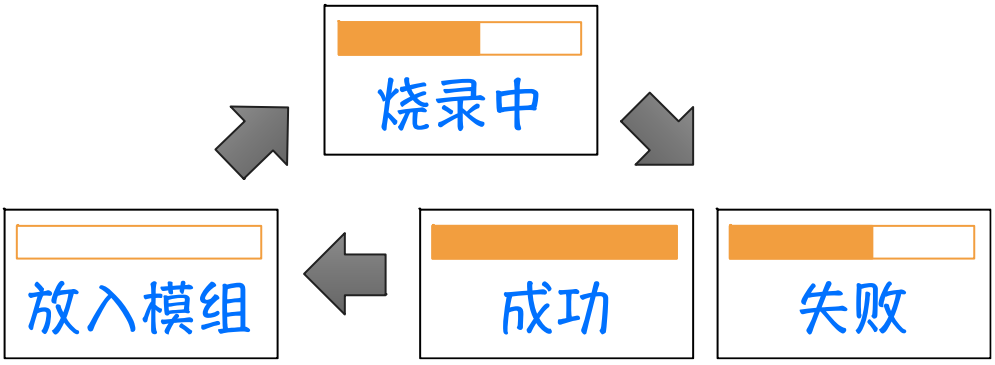

7. Connect to the next module to automatically start the next burn.

6.4.2. MXFlasher Settings

Set MXFlasher to enter setup mode by following the steps below.

1. After connecting the MXFlasher to the PC via the USB cable, wait for the MXFlasher to start up and the screen displays the burner configuration information.

2. Press and hold the button on the MXFlasher until the LED light is red, and the "gear" pattern is displayed on the colleague's screen.

3. You can see a USB flash drive with the name "MXCHIP" on the PC. The USB flash drive contains the following files:

    - README.TXT: Simple instruction manual
    - Config.txt: The burner configuration file, the contents of the file are as follows:

```
{
```

```
    "platform": "mx1270",
    "filename": "all.bin",
    "address": "0x00",
  }
```

Among them ,

- Platform: configured burning target chip model, set to mx1270
- Filename: the name of the binary file to be burned, and the file must be saved in the USB flash drive.
- Address: the starting address of the programming

Various bin files: firmware to be burned

Configuration example: Burn the binary file named at_cmd@mx1280.all.bin to the address 0x00 of the address flash:

1. Copy the firmware "at_cmd@mx1280.all.bin" to the USB flash drive.

2. Open config.txt, modify it as follows and save it.

```
  {
    "platform": "mx1270",
    "filename": "at_cmd@mx1280.all.bin",
    "address": "0x00",
  }
```

After the configuration is complete, set MXFlasher to enter the burning mode.

1. Press the button on the MXFlasher, the burner enters the programming mode, and the current configuration information will be displayed on the display, and the LED will go out.

2. Press the button on the MXFlasher and the screen will display "Load Module".

3. After connecting the module to be burned as shown in Figure 11, the programming starts automatically. The screen displays "burning" and displays "success" after completion.

4. Connect to the next module to automatically start the next burn.

7. Electrical Parameter

7.1. Absolute Maximum Parameters

Operation of the module outside of its absolute maximum ratings may result in permanent damage. At the same time, long-term exposure to the maximum rated conditions will affect the reliability of the module.

Table 8 Absolute Maximum Parameter：Voltage

Symbol	Ratings	Min	Max	Unit
V_{DD}–V_{SS}	Voltage	–0.3	3.6	V
V_{IN}	Input voltage on any other pin	V_{SS}−0.3	V_{DD}+0.3	V

Table 9 Absolute Maximum Parameter：Current

Symbol	Ratings	Max	Unit
I_{VDD}	Total current into V_{DD} power lines (source)	TBD	mA
I_{VSS}	Total current out of V_{SS} ground lines (sink)	TBD	mA
I_{IO}	Output current sunk by any I/O and control pin	TBD	mA
I_{IO}	Output current source by any I/O and control pin	TBD	mA

7.2. Operating Voltage and Current

The module current test environment is based on VDD=3.3V, the CPU is clocked at 52MHz, and UART1 is turned on.

Table 10 Operating Parameter：Voltage and Current

Symbol	Note	Conditions	Specification			
			Min.	Typical	Max.	Unit
V_{DD}	Voltage		2.7	3.3	3.6	V
I_{VDD}	RX Current	V_{DD}=3.3V，CPU@52MHz，UART1 enable	64.29	66.94	71.83	mA
I_{VDD}	TX Current	V_{DD}=3.3V，CPU@52MHz，UART1 enable, 802.11b 11M@18dBm, continuous send		271.86		mA
I_{VDD}	TX Current	V_{DD}=3.3V，CPU@52MHz，UART1 enable, 802.11g 54M@15dBm, continuous send		240.23		mA
I_{VDD}	TX Current	V_{DD}=3.3V，CPU@52MHz，UART1 enable, 802.11n MCS7@13dBm, continuous send		216.41		mA
I_{VDD}	RF Idle	V_{DD}=3.3V，CPU@52MHz，UART1 enable	9.58	9.59	13.43	mA
I_{VDD}	Standby	V_{DD}=3.3V	31.20	31.47	36.41	uA

7.3. Typical Application Power Consumption

The module current test environment is based on VDD=3.3V, the CPU is clocked at 52MHz, and UART1 is turned on.

Table 11 Typical application power consumption

Symbol	Note	Conditions	Specification			
			Min.	Average	Max.	Unit
I_{VDD}	Only MCU	Kernel run, disable Wi-Fi	9.58	9.59	13.43	mA
I_{VDD}	Only MCU	Kernel sleep, disable Wi-Fi	7.24	7.42	13.19	mA
I_{VDD}	MCU&RF	Station mode, no data transmitting	32.8	62.01	252.07	mA
I_{VDD}	MCU&RF	Station mode, enter power save mode	7.72	14.01	249.45	mA
I_{VDD}	MCU&RF	Station mode, send UDP packet per 100ms	32.93	63.02	253.71	mA
I_{VDD}	MCU&RF	Soft AP mode, beacon interval = 100ms	58.61	65.88	252.17	mA
I_{VDD}	MCU&RF	Monitor mode	60.64	64.68	76.55	mA

7.4. Temperature

Table 12 Storage and Working Temperature

Symbol	Ratings	Max	Unit
T_{STG}	Storage temperature	–40 to +125	℃
T_A	Working temperature	-40 to +85/105	℃

7.5. RF Parameter

Table 13 RF Parameter

Item	Specification
Operating Frequency	2.412~2.484GHz
Channel BW	20MHz
Antenna Interface	1T1R, single-stream
Wi-Fi Standard	IEEE 802.11b/g/n
Modulation Type	11b: DBPSK, DQPSK, CCK for DSSS 11g: BPSK, QPSK, 16QAM, 64QAM for OFDM 11n: MCS0~7, OFDM
Data Rates	11b: 1, 2, 5.5 and 11Mbps 11g: 6, 9, 12, 18, 24, 36, 48 and 54 Mbps 11n: MCS0~7, up to 72.2Mbps
Antenna type	One U.F.L connector for external antenna PCB printed ANT (Reserve)

Note: The following Tx test data is typically recorded in a normal temperature environment with Tx lasting about 20 seconds.

7.5.1. EMW3070, EMW3072

IEEE 802.11b Mode

Table 14 RF Emission Parameters in IEEE802.11b mode of EMW3070, EMW3072

TX Characteristics	Min.	Typical	Max.	Unit
Transmitter Output Power				
11b Target Power@1Mbps	14	15.5	17	dBm
11b Target Power@11Mbps	14	15.5	17	dBm
Spectrum Mask @ target power				
fc +/-11MHz to +/-22MHz			-30	dBr
fc > +/-22MHz			-50	dBr
Frequency Error	-15	-5	+15	ppm
Constellation Error (peak EVM) @target power				
1~11Mbps		-15.5	35% (or -11dB)	

Table 15 RF Receiving Parameters in IEEE802.11b mode of EMW3070, EMW3072

RX Characteristics	Min.	Typical	Max.	Unit
Minimum Input Level Sensitivity				
1Mbps (FER≦8%)		-98	-97	dBm
11Mbps (FER≦8%)		-89	-89	dBm

IEEE802.11g Mode

Table 16 RF Transmission Parameters in IEEE802.11g mode of EMW3070, EMW3072

TX Characteristics	Min.	Typical	Max.	Unit
Transmitter Output Power				
11b Target Power@6Mbps	14	15.5	17	dBm
11b Target Power@54Mbps	12.5	14	15.5	dBm
Spectrum Mask @ target power				
fc +/- 11MHz			-20	dBr
fc +/- 20MHz			-28	dBr
fc > +/-30MHz			-40	dBr
Frequency Error	-15	-5	+15	ppm
Constellation Error (peak EVM) @target power				
6Mbps	-	-26	-24	dBm
54Mbps	-	-29	-27	dBm

Table 17 RF Receiving Parameters in IEEE802.11g mode of EMW3070, EMW3072

RX Characteristics	Min.	Typical	Max.	Unit
Minimum Input Level Sensitivity				
6Mbps (FER≦10%)		-92.5	-92.5	dBm
54Mbps (FER≦10%)		-75.5	-75	dBm

IEEE802.11n HT20 Mode

Table 18 RF Transmission Parameters in IEEE802.11n HT20 mode of EMW3070, EMW3072

TX Characteristics	Min.	Typical	Max.	Unit
Transmitter Output Power				
11b Target Power@6Mbps	13	14.5	16	dBm
11b Target Power@54Mbps	11.5	13	14	dBm
Spectrum Mask @ target power				
fc +/- 11MHz			-20	dBr
fc +/- 20MHz			-28	dBr
fc > +/-30MHz			-45	dBr
Frequency Error	-15	-5	+15	ppm
Constellation Error (peak EVM) @target power				
MCS0	-	-29	-27	dBm
MCS7	-	-31	-28	dBm

Table 19 RF Receiving Parameters in IEEE802.11n HT20 mode of EMW3070, EMW3072

RX Characteristics	Min.	Typical	Max.	Unit
Minimum Input Level Sensitivity				
MCS0 (FER≦10%)		-92	-92	dBm
MCS7 (FER≦10%)		-73	-72.5	dBm

7.5.2. EMW3071

TBD

8. Antenna Information

The EMW307x has two specifications, PCB antenna and external antenna. Please refer to the order code for ordering. The IPX antenna connector is not soldered to the module using the PCB antenna. Better RF performance can be achieved by connecting an external antenna through an IPX connector.

8.1. PCB Antenna Parameters and Use

8.1.1. EMW3070 On-Board PCB Antenna Parameter

Table 20 EMW3070 On-Board PCB Antenna Parameter

Item	Min.	Typical	Max.	Unit
Frequency	2400		2500	MHz
Impedance		50		Ω
VSWR			2	
Gain	≤2dBi			
Efficiency	>70% or >-1.54dB			

Technical parameters of the EMW3071 onboard PCB antenna(TBD):

8.1.2. EMW3072 On-Board PCB Antenna Parameter

Table 21 EMW3072 On-Board Antenna Parameter

Item	Min.	Typical	Max.	Unit
Frequency	2400		2500	MHz
Impedance		50		Ω
VSWR			2	
Gain	≤2dBi			
Efficiency	>54% or >-2.68dB			

8.1.3. PCB Antenna Use Points

When using the PCB antenna on the module, you need to ensure that the distance between the motherboard PCB and other metal devices, connectors, PCB vias, traces, and copper is at least 16mm. The shaded areas in the figure below need to be kept away from metal components, sensors, sources of interference, and other materials that may cause signal interference.

Figure 14 PCB Antenna Minimum Clearance Area (unit : mm)

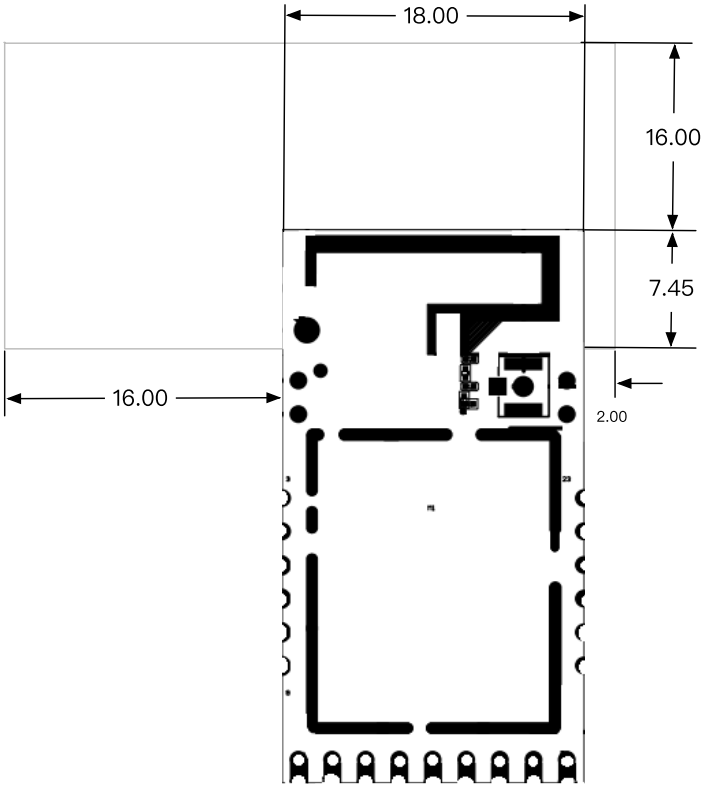

8.2. External Antenna Parameters and Use

Users can select 2.4G antennas with different external dimensions and gains of no more than 2dBi depending on the application environment.

When using an external antenna, be careful to power on the starter module after connecting the antenna. Because the module will perform IQ calibration after power-on, send a single carrier through the PA to detect the signal through the RX loop. If the load is unloaded (the antenna is not connected), it will cause a calibration error, making the output power of the PA abnormal, and forming a large standing wave at the PA output, possibly damaging the internal device.

The following is a copper tube antenna for an IPEX connector commonly used by MXCHIP:

Figure 15 Copper Tube Antenna Size

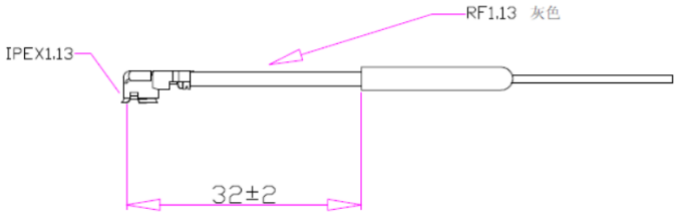

- Frequency range: 2400-2500 Hz
- Input impedance: 50 OHM
- Standing wave ratio: < 2.0

- Gain: 2.0dbi
- Polarization: vertical
- Directionality: Omnidirectional
- Copper tube: 4.4*23mm
- Wire: 1.13 gray line L-82mm

External antenna IPEX seat size:

Figure 16 External Antenna IPEX Seat Size D diagram

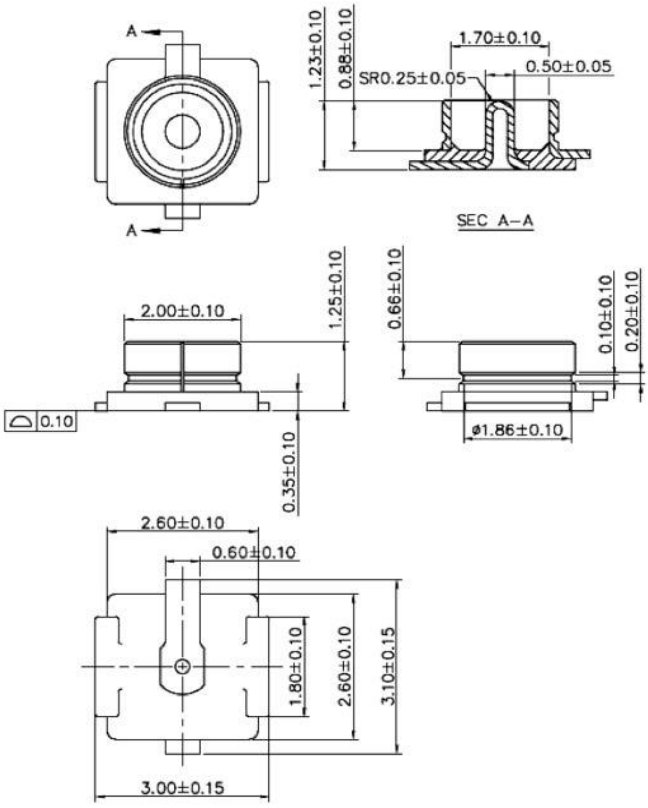

9. Assembly Size and PCB Package

9.1. Assembly Size Diagram

Figure 17 EMW3070 Three View (unit : mm)

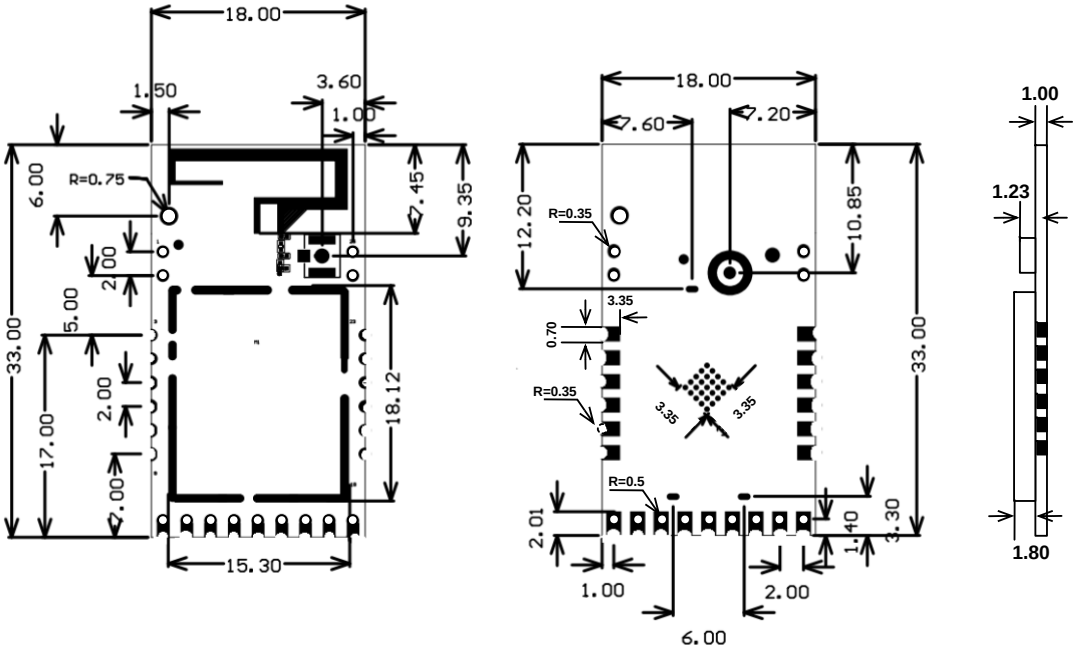

Figure 18 EMW3071 Three View (unit : mm)

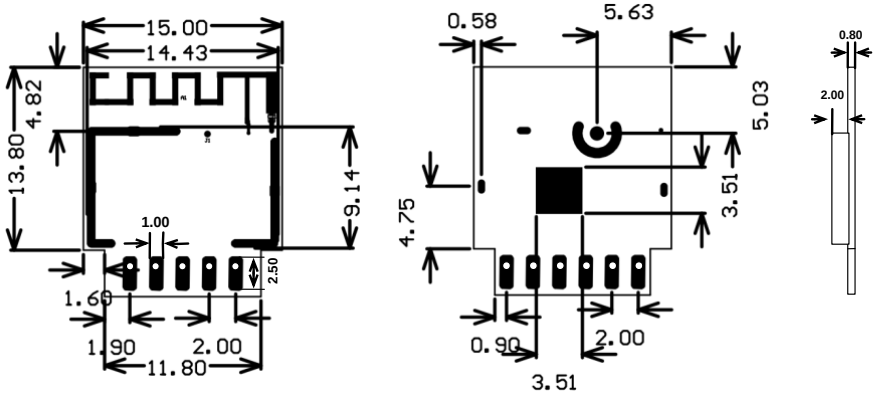

Figure 19 EMW3072 Three View (unit : mm)

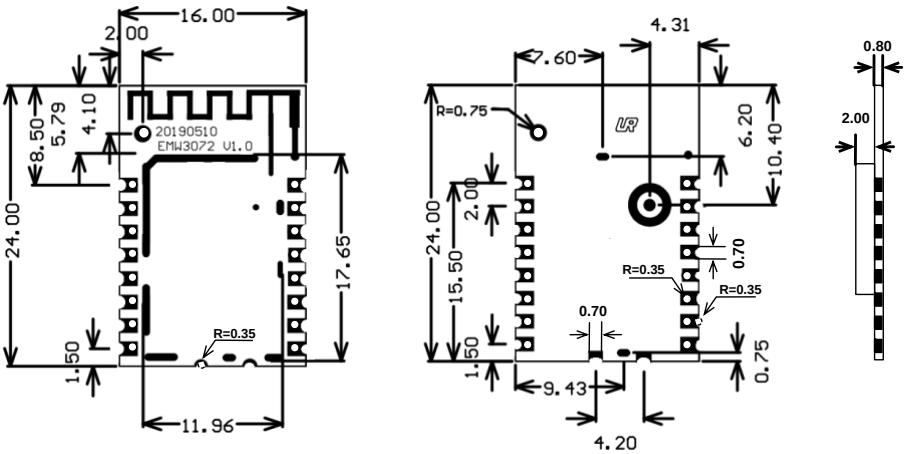

9.2. Recommended Package Drawing

Figure 20 EMW3070、EMW3072 PCB Package Size (unit : mm)

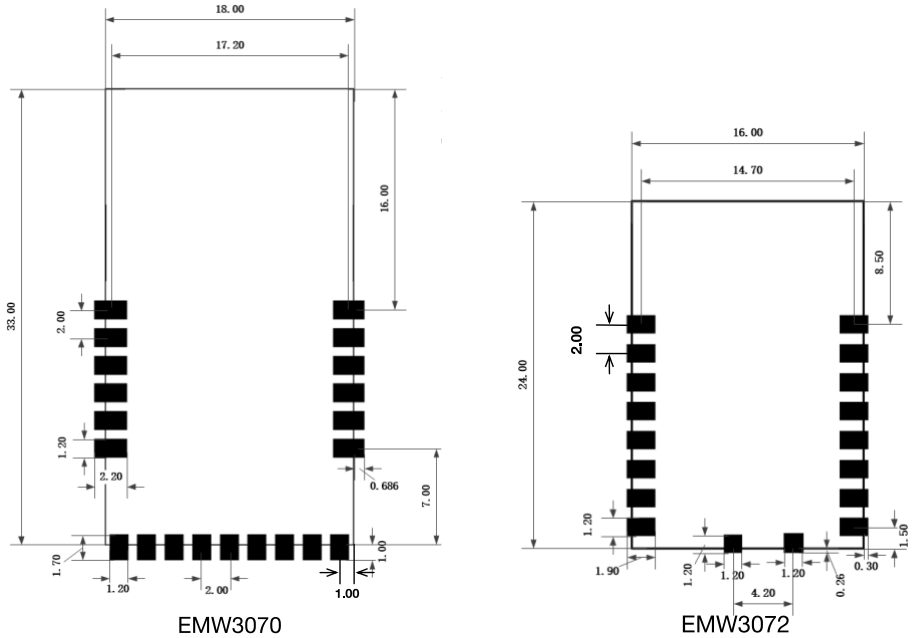

Figure 21 EMW3071 PCB Package Size (unit : mm)

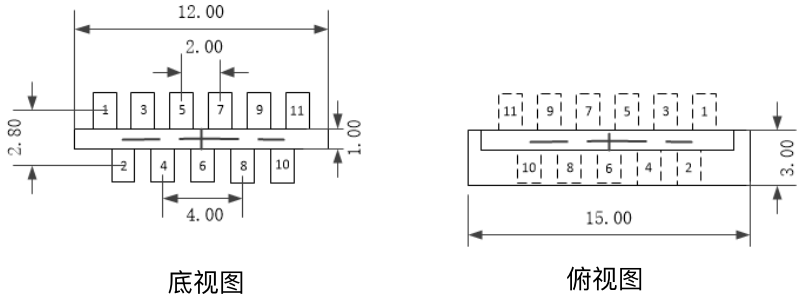

10. Reference Circuits and Typical Applications

10.1. IoT Wi-Fi Data Transmission

The module transmits data through the serial port and the device, and after connecting to the Internet through Wi-Fi, the data is transmitted to the Internet of Things cloud service to realize data collection and remote control. The system block diagram of the application is as follows:

Figure 22 Wi-Fi data Transmission Typical Application Block Diagram

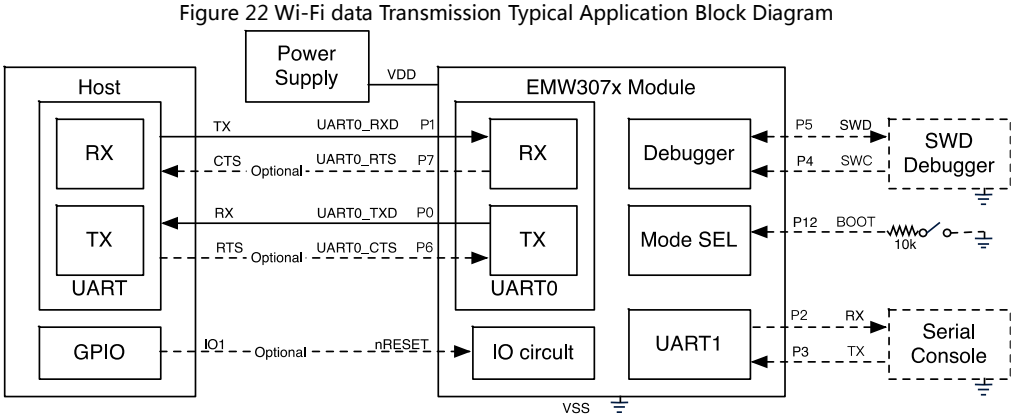

Among them,

- UART0 is used to transfer application data to the host, and UART1 is used for debugging information output and debugging command input.
- The SWD interface can use the emulator to debug and download the firmware in the EMW307x module.
- After the BOOT signal is grounded and powered up, the module can enter the boot program. In the bootloader, the firmware in the EMW307x module can be updated via the serial port (UART0/1).

VDD is decoupled by a 10uF (16V) capacitor. A typical 5V to 3.3V supply is shown in Figure 23:

Figure 23 5V to 3.3V Power Supply Typical Circuit

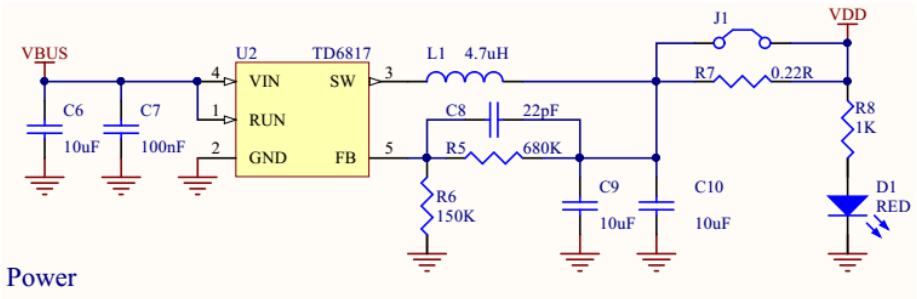

Through the USB to serial port circuit, you can connect to the PC via USB and interact with the module through the serial port terminal. The typical circuit is shown in Figure 24:

Figure 24 USB to Serial Port Typical Circuit

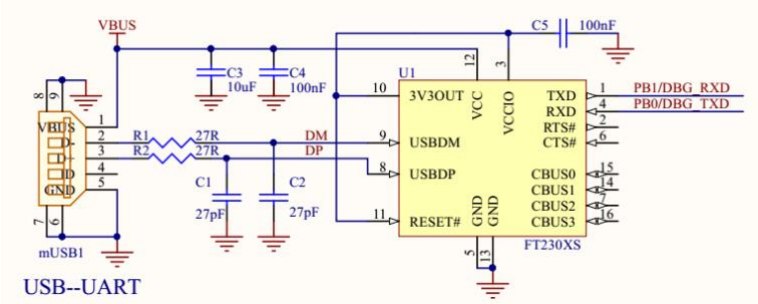

If the host uses 5V power supply and the high-level signal of the serial port is 5V, you need to convert 5V to 3.3V before connecting to the module. A typical circuit is shown in Figure 25:

Figure 25 5V UART Signal Conversion Circuit

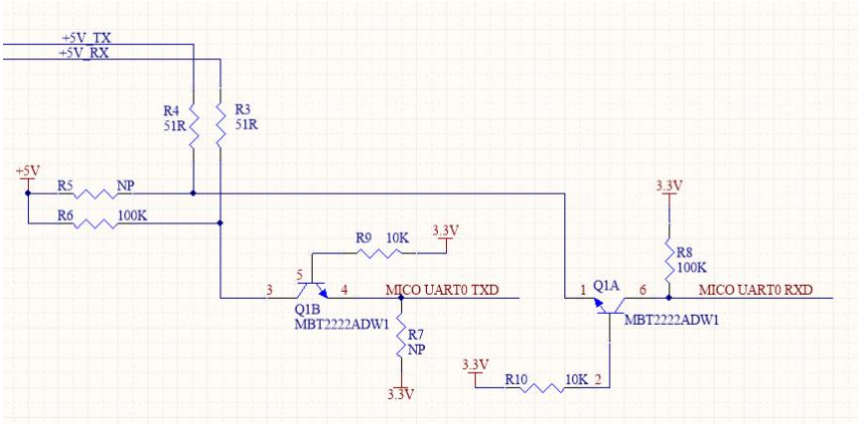

10.2. Intelligent Lighting

The EMW307x module can control the brightness of LED lights of various colors through the PWM function of IO, and realize the display of various colors and cool and warm colors. The PWM signal can be connected to any color LED, but if you connect according to the specifications shown in Figure 26, you can use the smart lighting firmware provided by MXCHIP to speed up the time to market.

Figure 26 Intelligent Lighting Application Block

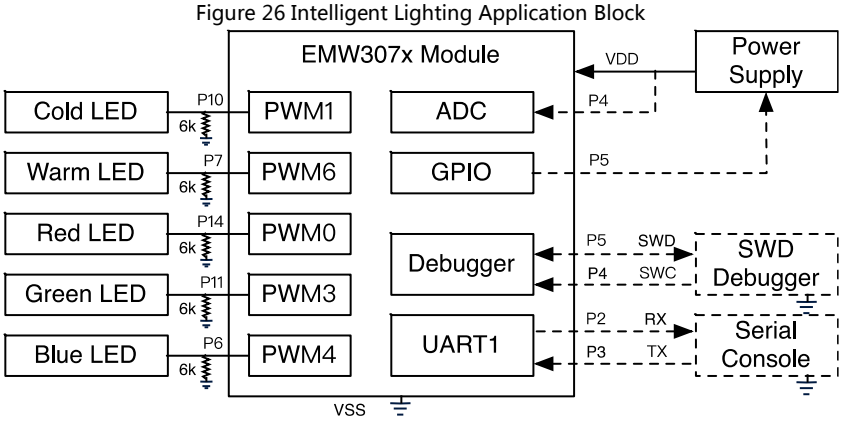

Among them,

If the PWM output signal is externally connected to the LED, it needs to be grounded through a 6K resistor; if it is not connected to the LED, it will be left floating. When the module is running, it will automatically detect the channel of the connected LED light to achieve the corresponding function.

- Optional function: The ADC can detect the power supply voltage and fine tune the brightness of the LED light.
- Optional features: GPIO control power module, which can turn off some power when needed to achieve lower standby power consumption.
- Optional features: Download and debug firmware using the debug interface and debug serial port

11. Production Guidelines

Qingke stamp port packaging module must be SMT machine patches, module humidity sensitivity grade MSL3, after unpacking more than a fixed time patches to bake module.

- SMT patches require instruments
  - Reflow bonding machine
  - AOI detector
  - 6-8mm suction nozzle
- Baking requires equipment:
  - Cabinet oven
  - Anti-static, high temperature tray
  - Antistatic and heat resistant gloves

The storage conditions of Qingke module are as follows:

- Moisture-proof bags must be stored in an environment with temperature < 30 degree C and humidity < 85% RH.
- A humidity indicator card is installed in the sealed package.

Figure 27 Humidity Card

After the module is split, if the humidity card shows pink, it needs to be baked.

The baking parameters are as follows:

- The baking temperature is 120 5 and the baking time is 4 hours.
- The alarm temperature is set to 130 C.
- SMT patches can be made after cooling < 36 C under natural conditions.
- Drying times: 1 time.
- If there is no welding after baking for more than 12 hours, please bake again.

If the disassembly time exceeds 3 months, SMT process is forbidden to weld this batch of modules,

because PCB gold deposition process, over 3 months, pad oxidation is serious, SMT patch is likely to lead to virtual welding, leak welding, resulting in various problems, our company does not assume the corresponding responsibility;

Before SMT patch, ESD (Electrostatic Discharge, Electrostatic Release) protection should be applied to the module.

SMT patches should be made according to the reflow curve. The peak temperature is 250 C. The reflow temperature curve is shown in Chapter 9, **Error! Reference source not found.**.

In order to ensure the qualified rate of reflow soldering, 10% of the first patches should be taken for visual inspection and AOI testing to ensure the rationality of furnace temperature control, device adsorption mode and placement mode, and 5-10 patches per hour are recommended for visual inspection and AOI testing in subsequent batch production.

11.1. Precautions

- Operators of each station must wear static gloves during the entire production process;
- Do not exceed the baking time when baking;
- It is strictly forbidden to add explosive, flammable or corrosive substances during baking;
- When baking, the module uses a high temperature tray to be placed in the oven to keep the air circulation between each module while avoiding direct contact between the module and the inner wall of the oven;
- When baking, please close the oven door to ensure that the oven is closed to prevent temperature leakage and affect the baking effect.
- Try not to open the door when the oven is running. If it must be opened, try to shorten the time for opening the door;
- After baking, the module should be naturally cooled to <36 °C before wearing the static gloves to avoid burns;
- When operating, strictly guard against water or dirt on the bottom of the module;

The temperature and humidity control level of Qingke factory module is Level3, and the storage and baking conditions are based on IPC/JEDEC J-STD-020.

11.2. Secondary Reflow Temperature Curve

Solder paste type is recommended: SAC305, lead free. The number of reflows does not exceed 2 times. The peak temperature does not exceed 245 °C. The following is a typical furnace temperature profile setting.

Table 22 Typical Furnace Temperature Setting

Welding furnace setting	Z1	Z2	Z3	Z4	Z5	Z6	Z7	Z8	Z9	Z10

Upper temperature zone setting	135	150	170	175	180	215	250	260	247	200
Lower temperature zone setting	135	150	170	175	180	215	250	260	247	200

Figure 28 Typical Secondary Reflow Temperature Curve

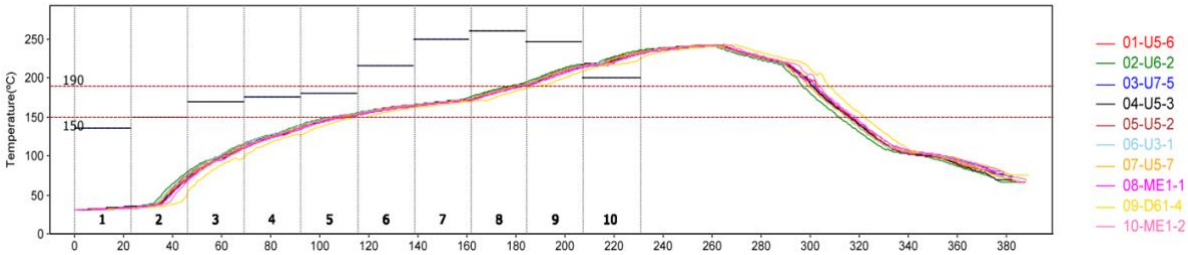

- Preheating temperature rise from 30 ° C to 150 ° C: 0-3 ° C / s, typical value: 1.2 ° C / s
- 150 ° C ~ 190 ° C immersion temperature: 60-100 seconds, typical value: 72 seconds
- Peak temperature: 245 ° C, typical value: 242 ° C
- Time above 220°C: 50 seconds to 90 seconds, typical value: 70 seconds
- 217 ° C cooling rate: -3 ~ 0 ° C / s, typical value: -2.0 ° C / s

11.3. Storage Condition

Figure 29 Storage Condition Diagram

CAUTION
This bag contains
MOISTURE-SENSITIVE DEVICES

LEVEL **3**
If Blank, see adjacent bar code label

1. Calculated shelf life in sealed bag: 12 months at < 40°C and < 90% relative humidity (RH)
2. Peak package body temperature: 260 °C
   If Blank, see adjacent bar code label
3. After bag is opened, devices that will be subjected to reflow solder or other high temperature process must
   a) Mounted within: 168 hrs. of factory conditions
   If Blank, see adjacent bar code label
   ≤ 30°C/60%RH, OR
   b) Stored at <10% RH
4. Devices require bake, before mounting, if:
   a) Humidity Indicator Card is > 10% when read at 23 ± 5°C
   b) 3a or 3b not met.
5. If baking is required, devices may be baked for 48 hrs. at 125 ± 5°C

   Note: If device containers cannot be subjected to high temperature or shorter bake times are desired, reference IPC/JEDEC J-STD-033 for bake procedure

Bag Seal Date: _____
If Blank, see adjacent bar code label

Note: Level and body temperature defined by IPC/JEDEC J-STD-020

12. Package and Label

12.1. Package Information

Table 23 Module MOQ and Packaging Information

Part Number	MOQ(pcs)	Shipping and packaging method	Number of modules per tray (pcs)	Number of trays per small container (pieces)
EMW3070-PI6 EMW3070-EI6	1050 (2 Small boxes)	Tray	35	15

12.2. Product Label

Figure 30 Product Label Information

Appendix 1: Sales and Technical Support Information

If you need to consult or purchase this product, please call Shanghai Qingke Information Technology Co., Ltd. during office hours.

Office hours: Monday to Friday morning: 9:00 to 12:00, afternoon: 13:00 to 18:00

Contact Tel: +86-21-52655026

Address: 9th Floor, No. 5, Lane 2145, Jinshajiang Road, Putuo District, Shanghai

Zip code: 200333

Email: sales@mxchip.com